THOMAS GOODEN FOUNDRY SERVICES PTY LIMITED

Tel (02) 9603-9988 Fax (02) 9603-9288

E-mail: sales@tgfs.com.au

Dimensions And Diagram Cap

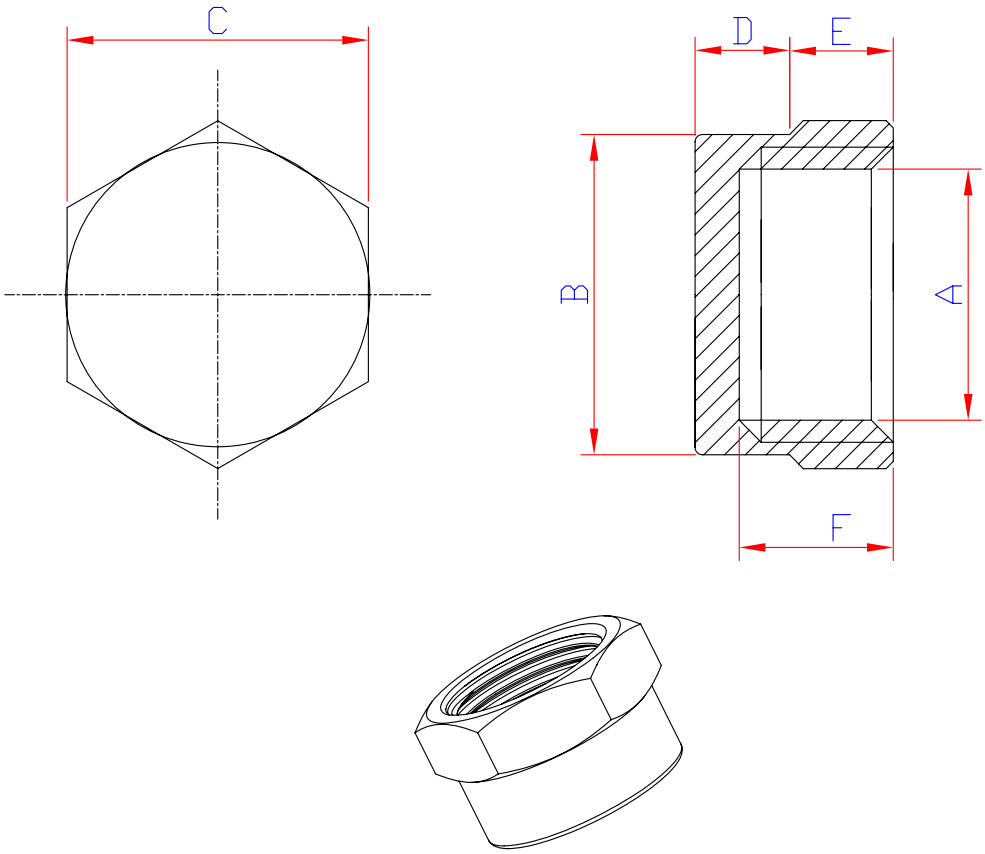

Dimensions - mm

Size	A	B	C	D	E	F	
8	G1/8 28TPI	13.2	13.4	5.5	5.2	7.8	
10	G1/4 19TPI	15.8	16	7.1	5.2	9.6	
15	G3/8 19TPI	20.5	20.7	7.2	6.5	10.5	
20	G1/2 14TPI	25.5	25.8	7.7	7.5	12	
20	G3/4 14TPI	31.3	31.5	9.2	7.5	13.5	
25	G1 11TPI	38.8	39	12.4	8	17	
32	G1'1/4 11TPI	47.2	47.2	8.5	12.2	16.8	
40	G1'1/2 11TPI	54.4	54.4	8.5	12.2	16.8	
50	G2 11TPI	66.5	66.5	9.9	9.2	14.1	
65	G2'1/2 11TPI	86	86	0	27.5	20.7	
80	G3 11TPI	98	98	0	27.5	20.7	